SUSPENSION, REAR TRAILING ARMS AND MOUNTING - Z26NEY99A4/B4/A6/B6 (C760062)

2026 RZR - RZR XP S 1000 ULTIMATE (R01) - Z26NEY99A4/B4/A6/B6

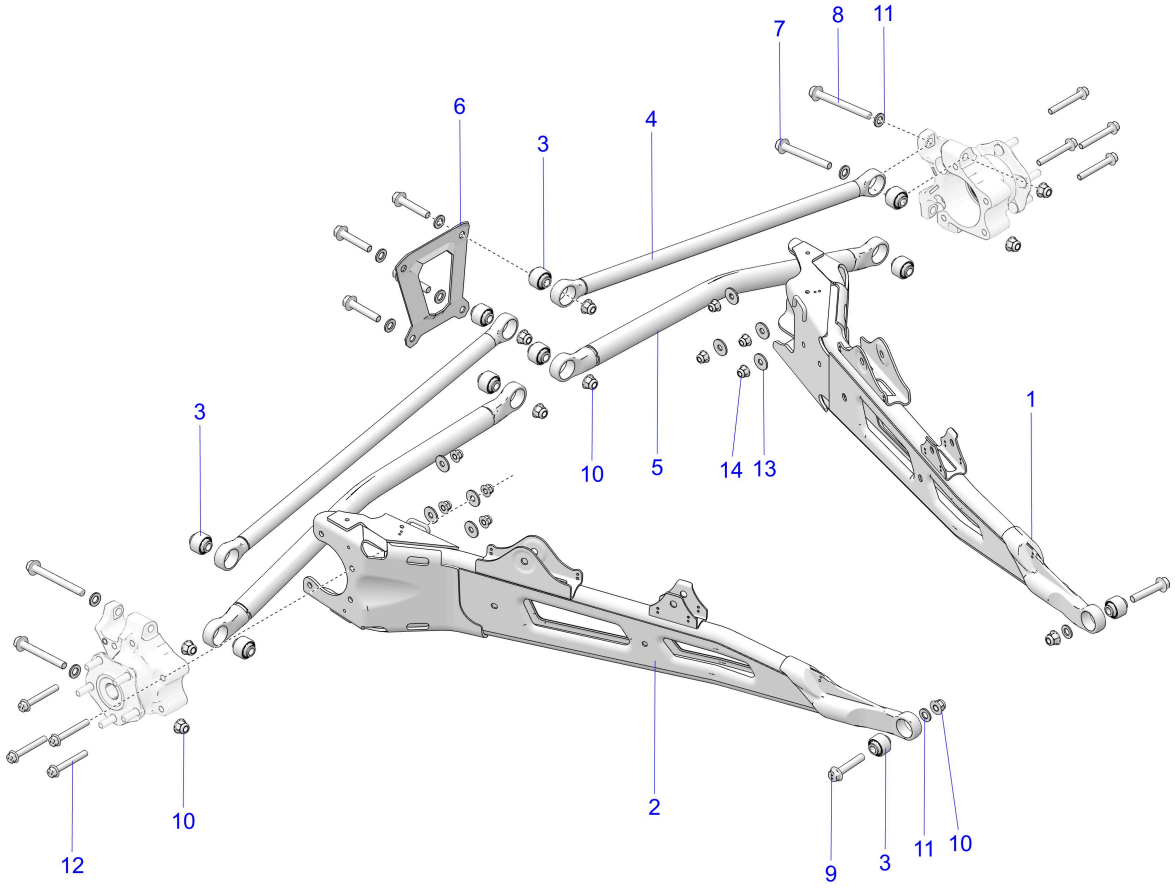

© 2025 Polaris Industries Inc. C760062

Reference #	*Part#*	*Description*	*Quantity*
1	1545170-458	ASM-TRL ARM,LH,BLK [INCLUDES QTY 1 OF 3]	1
2	1545171-458	ASM-TRL ARM,RH,BLK [INCLUDES QTY 1 OF 3]	1
3	7082253	BEARING-SPHERICAL	10
4	1545207-458	ASM-RADIUS ROD,UPR,BLK [INCLUDES QTY 2 OF 3]	2
5	1545208-458	ASM-RADIUS ROD,LWR,BLK [INCLUDES QTY 2 OF 3]	2
6	5262630-458	PLATE-REAR,BOLT BRACE,M.BLK	1
7	7521334-105	SCR-HXFL-M12X1.75X105 10.9 ZFB	2
8	7521334-120	SCR-HXFL-M12X1.75X120 10.9 ZFB	2
9	7521334-65	SCR-HXFL-M12X1.75X65 10.9 ZFB	6
10	7548030	NUT-HXFL-M12X1.75 8 ZTB NYL	10
11	7557236	WSHR-FLAT-M12X2.5 ZTB	10
12	7521333-75	SCR-HXFL-M10X1.5X75 10.9 ZFB	8
13	7558716	WSHR-FLAT-M10X2.5 LARGE ZTB	8
14	7548029	NUT-HXFL-M10X1.5 8 ZTB NYL	8

Copyright 1996-2026 Polaris Industries U.S.A All rights reserved.